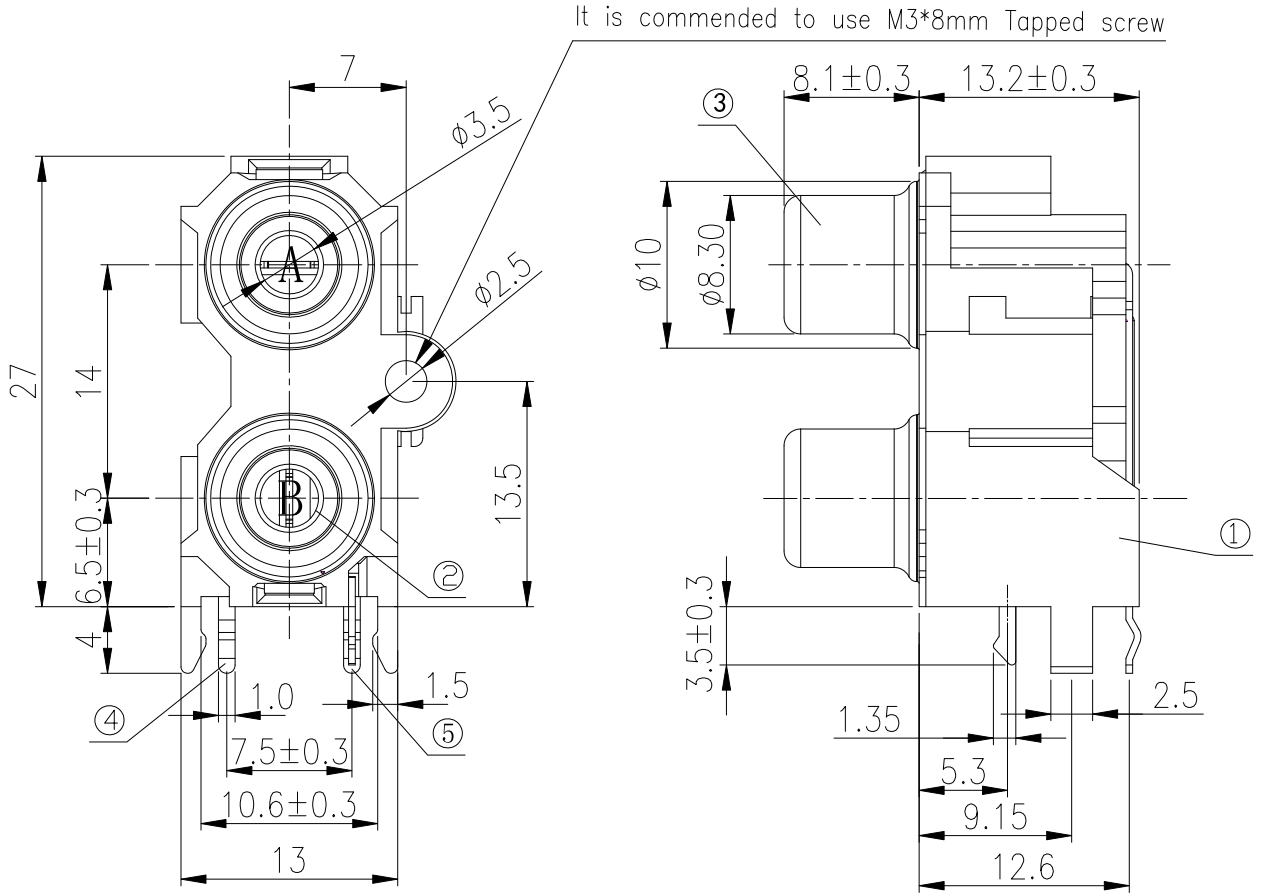

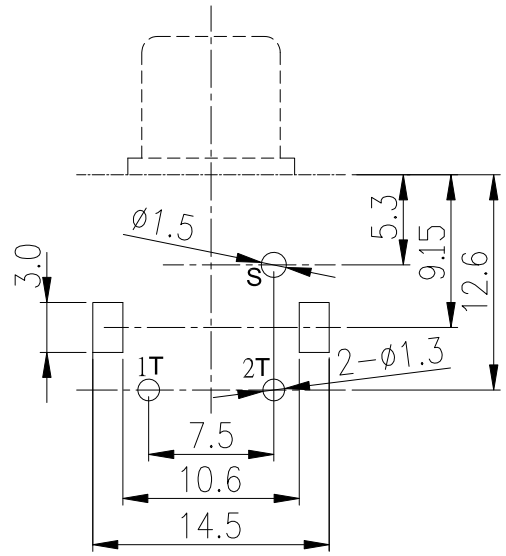

T:1.6 Dimensions of PC board holes

PCB Tolerance:±0.05(Printed-bottom view)

WASHER COLOR	SCHEMATIC
A	
B	
WHITE	
RED	

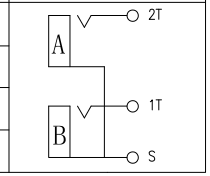

工程課
106.06.07
確認

LTR	PART NAME	QTY	MATERIAL	REMARK
5	TERMINAL	1	C2680 t=0.4	Cu/Sn PLATED
4	TERMINAL	1	C2680 t=0.4	Cu/Sn PLATED
3	OUTER CONTACT	1	C2680 t=0.4	Cu/Sn PLATED
2	WASHER	2	PBT	UL-94V0
1	HOUSING	1	PBT	UL-94V0

承洧科技股份有限公司
Cherng Weei Technology Corp.

DESCRIPTION(內容):	RCA JACK ϕ3.5 90° (RoHS)
PART NO: (料號)	CRCA-04022-01H
DWG NO(圖號):	RCA-04022-01H
DRAWN(製圖):	GONG
CHECKED(確認):	TERESA
APPROVAL(核准):	JOHNNY
GENERAL TOLERANCE: (公差)	X ±0.3, X.X ±0.2, X.XX ±0.1
SCALE(比例):	FREE
REV:	R1
UNIT:	mm
SIZE:	A4
SHEET:	1/1

REV	DESCRIPTION	DATE
R0		2016.11.10
R1	圖面更新	2017.06.07
R2		
R3		

CF1246