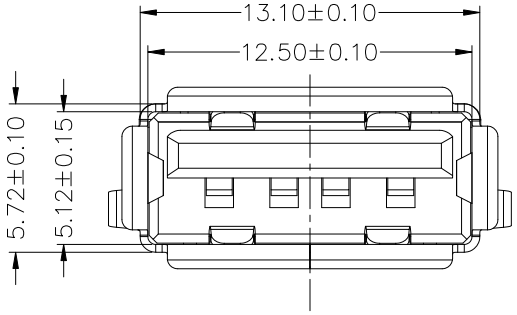

MATERIALS

HOUSING : PBT (UL 94V-0). COLOR: BLACK or WHITE
SHELL : SPCC, NICKEL PLATING
TERMINAL : COPPER ALLOY(C2680), GOLD PLATED ON CONTACT AREA
TIN PLATED ON SOLDER TAIL

SPECIFICATION

CURRENT RATING : 1 AMP MAX
DIELECTRIC WITHSTANDING : 500V AC FOR ONE MINUTE
CONTACT RESISTANCE : 30m OHMS MAX
INSULATION RESISTANCE : 1000M OHMS MIN AT DC 100V
OPERATION TEMPERATURE : -25˚C～+85˚C

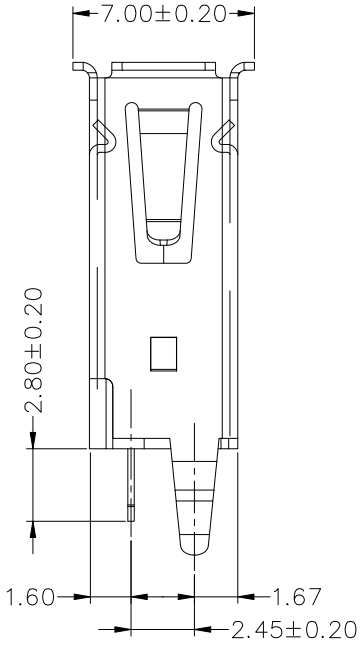

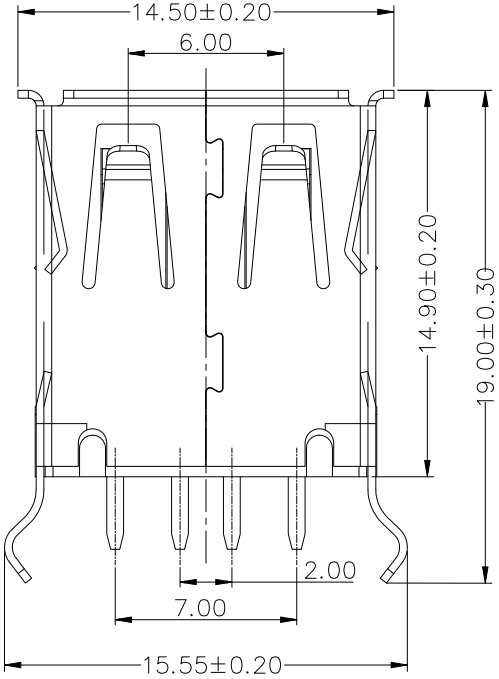

PART NO.	COLOR.
UAF-041VGPB-CF1066	BLACK
UAF-041VGPW-CF1066	WHITE

工程課
107.07.06
確認

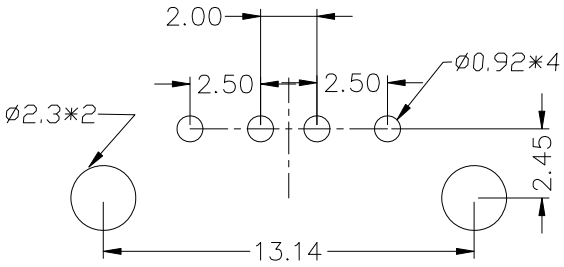

RECOMMENDED PCB LAYOUT
(TOLERANCES ±0.05)

承洧科技股份有限公司
Cherng Weei Technology Corp.

DESCRIPTION(內容): USB A TYPE,PCB MOUNT, DIP,METAL SHIELD, FEMALE,SHORT(L:14.9)(RoHS)	DRAWN(製圖): GONG	GENERAL TOLERANCE: (公差) .X ±0.3 .XX ±0.2	REV: R2	REV	DESCRIPTION	DATE
	CHECKED(確認): TERESA		UNIT: mm	R0	RELEASE	2014.12.02
PART NO: (料號) UAF-041VGPX-CF1066	APPROVAL(核准): JOHNNY	SCALE(比例): FREE	SIZE: A4	R1	圖面更新	2017.05.09
DWG NO(圖號): 22AA-041T-11ALX1(22AA-011)			SHEET: 1/1	R2	圖面更新	2018.07.06
				R3		

CF1066